

OVNI-R

Item code	**86.I026.2631.02**
Product type	**Indoor**
Category	**Industrial**
Family	**OVNI**
Subfamily	**OVNI-R**
Pictograms	CRI 80 · CE · Driver INCL. · On Off · 1-10V · 50000h L70B10

Dimensions	
Product dimensions (mm)	**ø358*55mm**

Scheme

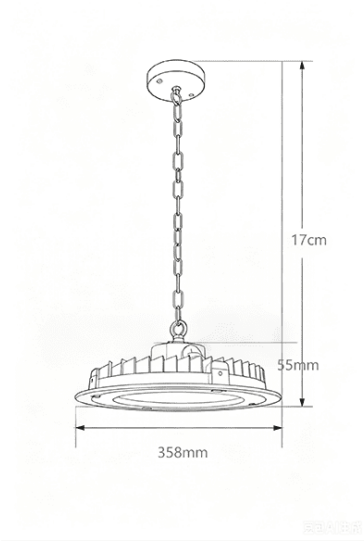

Product	
Real power (W)	**200**
Real luminous flux (Lm)	**24000**
Luminous efficiency (Lm/W)	**120**
Beam angle (º)	**83.3**
IP	**65**
Electrical feeding	**120-277V**
U. G. R	**12**
Control gear	**ON-OFF**
Colour temperature (K)	**6000**
IK	**09**